CODE/ADDENDA 2004/- APPROVED JR
RELEASED FOR PRODUCTION
Q.C. _____ DATE _____

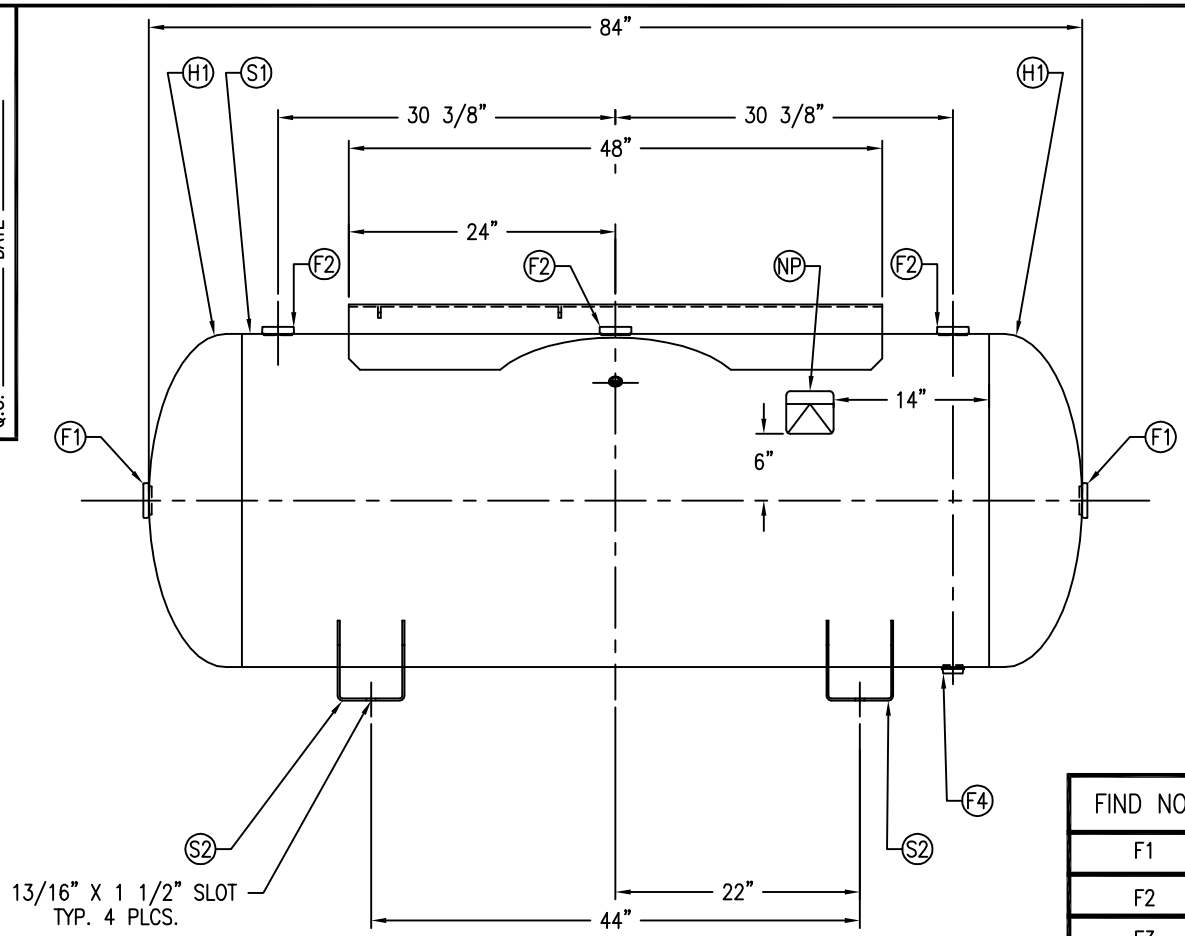

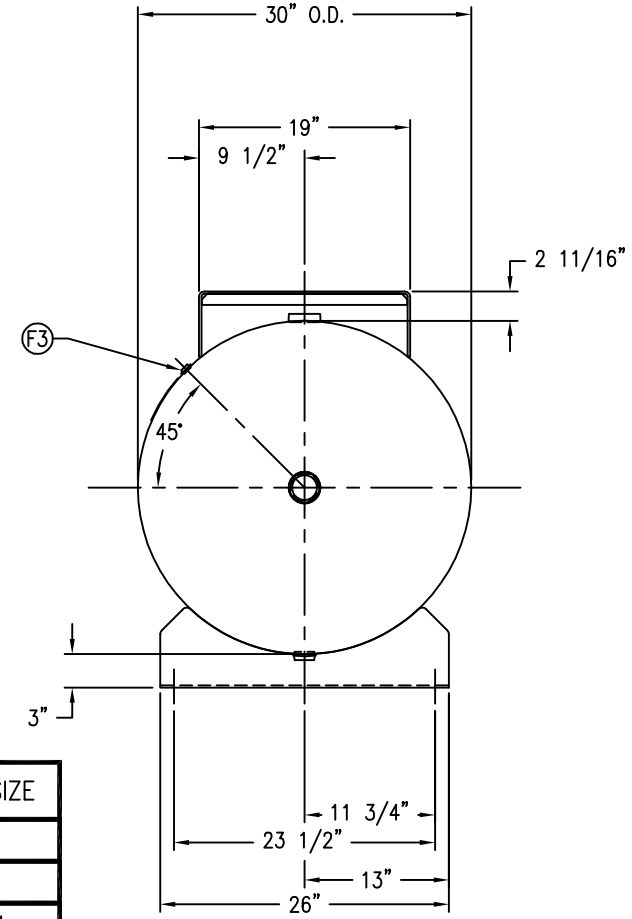

FIND NO.	NPT SIZE
F1	2
F2	2
F3	1/4
F4	1

SYM	DATE	BY	REVISION	APP	XREF REV.	NOTES
					C691 B	
					C642 A	

SPECIFICATIONS

O.D. 30 LGTH. 84
MAWP 200 PSI @ 650 °F

GAL 240 S.A. 57.8
WT. 716# CU.FT. 31.3

CRN F0628.1C

CODE: ASME SEC. VIII DIV. I, LATEST EDITION & ADDENDA

WELD DETAILS: M-1932
STD. TOLERANCES (UNLESS OTHERWISE NOTED): M-2461

MANCHESTER TANK

H:\3000\

HORIZONTAL AIR RECEIVER

DRAWN BY	DATE	SCALE: NONE
APP. BY	DATE	DRAWING NO. 302485