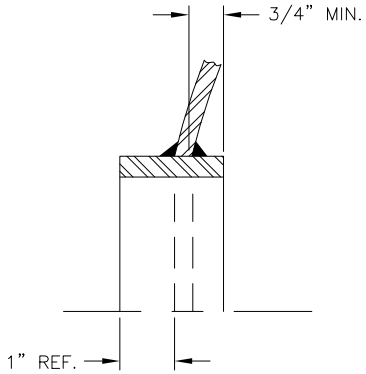

MANWAY DETAIL

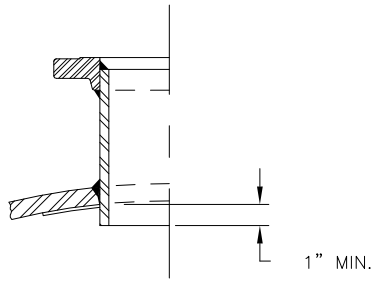

6" NOZZLE DETAIL

NO.	QTY.	DESCRIPTION	SPEC	SUB-DWG.
S1	1			
H1	2			
C1	1	3"-NPT 3000# HALF COUPLING	SA-105	
F1	1	1/4"-NPT 1500# FLAT FLANGE	SA-181-70	
F2	1	1"-NPT 1500# RADIAL FLANGE	SA-181-70	
F3	2	6" 150# ANSI RF.SO. FLANGE	SA-105	
F3	2	6" SCH.80 PIPE X 7 1/2" LONG	SA-106-B	
F3	2	.134 X 8 5/8" O.D. X 6 5/8" I.D. BACKING RING	C1010/SA-36	
F4	1	2"-NPT 1500# FLAT FLANGE	SA-181-70	
F5	1	3/4"-NPT 1500# RADIAL FLANGE	SA-181-70	
M1	1	12" X 16" X 3/4" X 4" 300# MANWAY	SA-675-70/SA-106-C	
S2	2	1/4" X 15 11/16" X 48" SADDLE BRACKET	C1008	
S3	4	1/4" X 6" X 10 11/16" GUSSET	C1008	
A1	2	3/4" X 5" X 12" STANDARD LIFT LUG FOR HORIZ.		A84388
NP	1	ASME DATA PLATE	C1010	

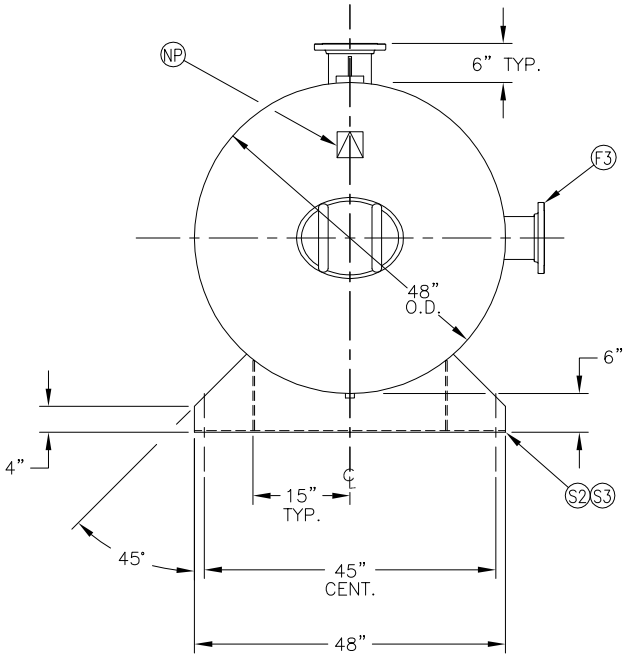

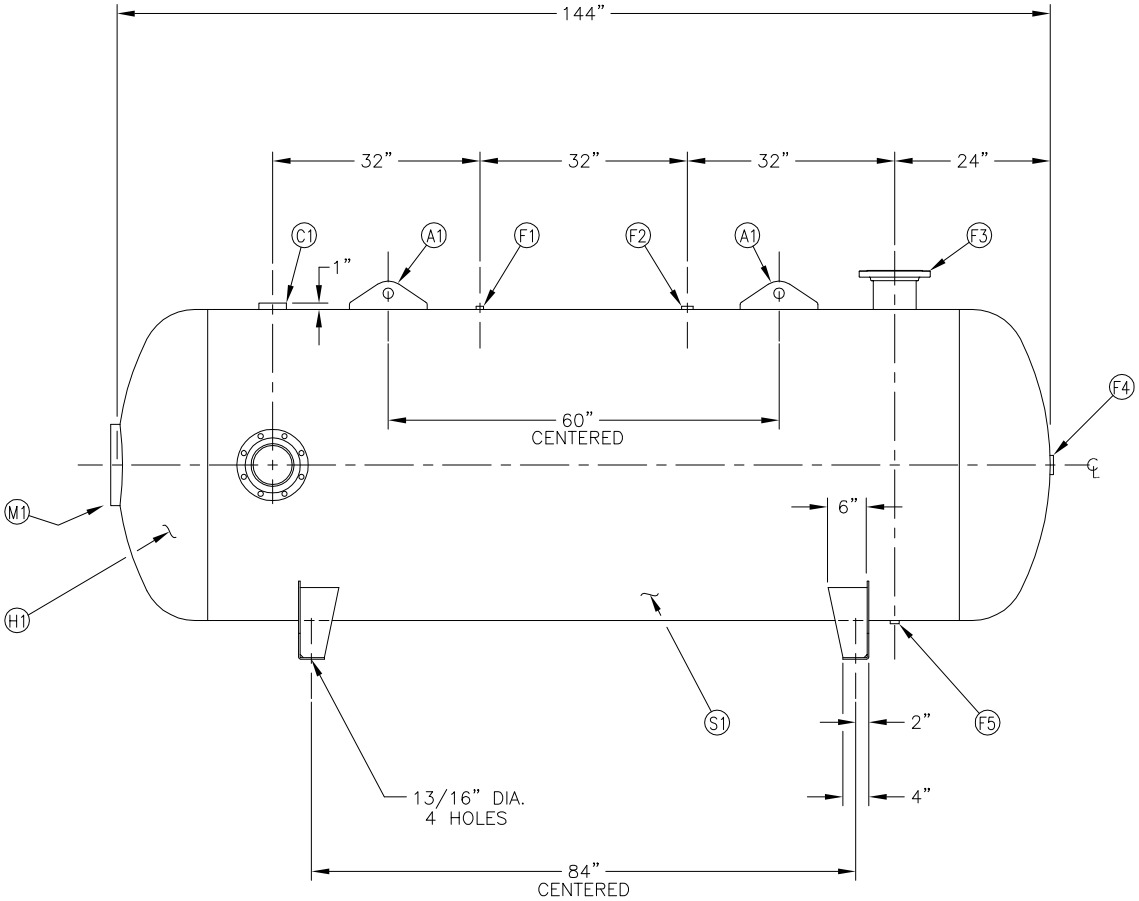

SYM	DATE	BY	REVISION	APP	XREF REV.

NOTES

BREAK ALL EXPOSED INTERIOR NOZZLE EDGES
ALL FLANGE BOLT HOLES TO STRADDLE VESSEL CENTERLINES

SPECIFICATIONS

O.D. 48 LGTH. 144
MAWP 200 PSI @ 400 °F
CRN ---
GAL. 1060 S.A.
WT. 2500 CU.FT.
CORR ALW —— SH —— HD
CODE ASME SECT. VIII, DIV.1
PER DATE OF DWG/LAST REV
WELD DETAILS: M-1932
STD. TOLERANCES (UNLESS OTHERWISE NOTED): M-2461

MANCHESTER TANK Q:\3000

48" X 144"
STANDARD AIR REC.

DRAWN BY	DATE	SCALE: NONE
APP. BY	DATE	DRAWING NO. 302494